STORAGE BATTERY SYSTEMS, LLC.

Rack-Info

Rack Type

EQ-E-PGX1-42

Rack dimensions

Length = 165.35 inch
Width = 17.68 inch
Height = 62.60 inch
B = 14.13 inch

Part list

```
4   x EQ-E-PGX1
2   x 1504
1   x 1204
2   x 1504C
1   x 1204C
3   x EB0974
2   x 1T-STT-SET
```

Rack-Weight
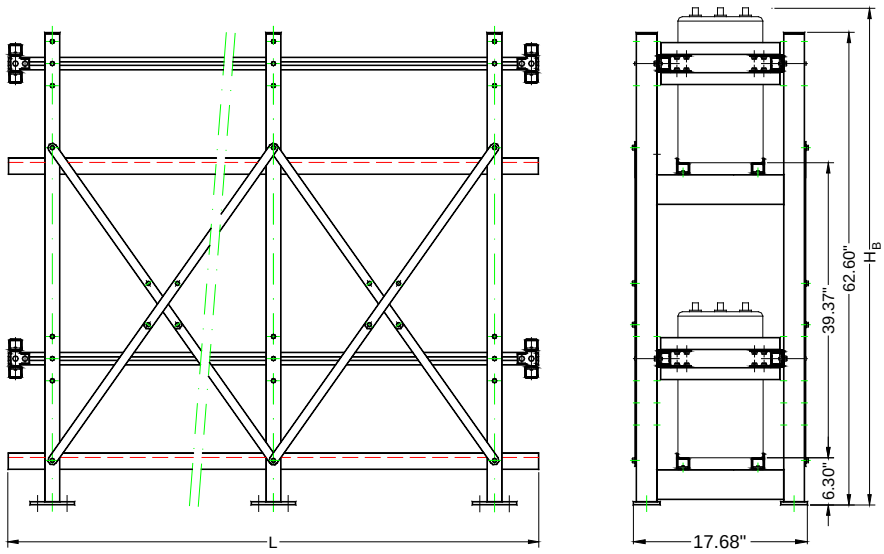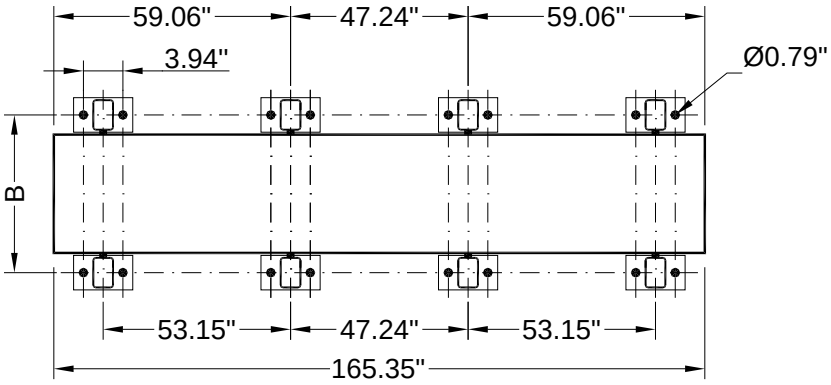
493.0 lbs