STORAGE BATTERY SYSTEMS, LLC.

Rack-Info

Rack Type

EQ-E-PGX1-36 / EQ-E-PGX1-36H

Rack dimensions

Length = 141.73 inch
Width = 17.68 inch
Height = 62.60 inch
B = 14.13 inch

Part list

4 x EQ-E-PGX1
3 x 1204
3 x 1204C
3 x EB0974
2 x 1T-STT-SET

Rack-Weight
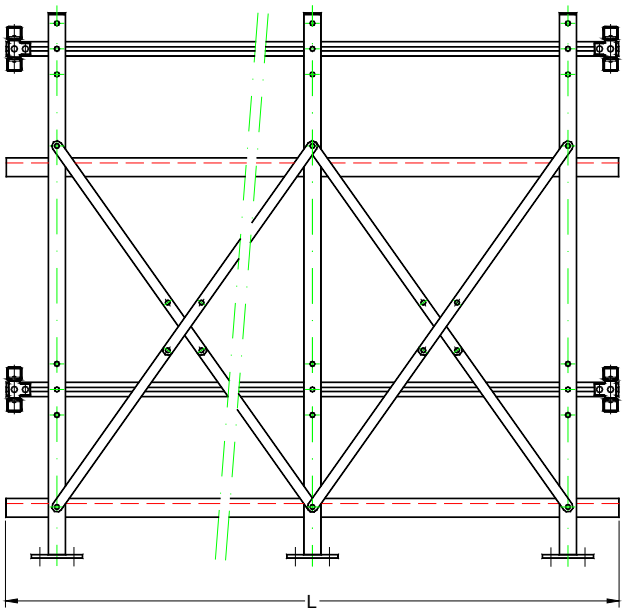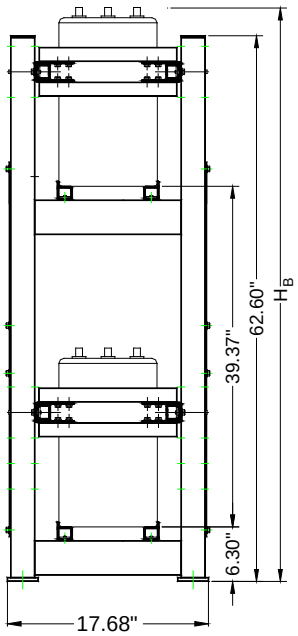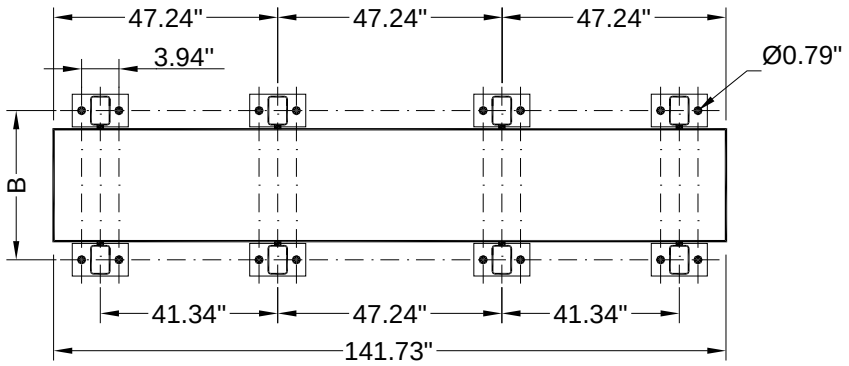
453.3 lbs